27 x 51½ — Case 2, Drawer 12, Section 1.

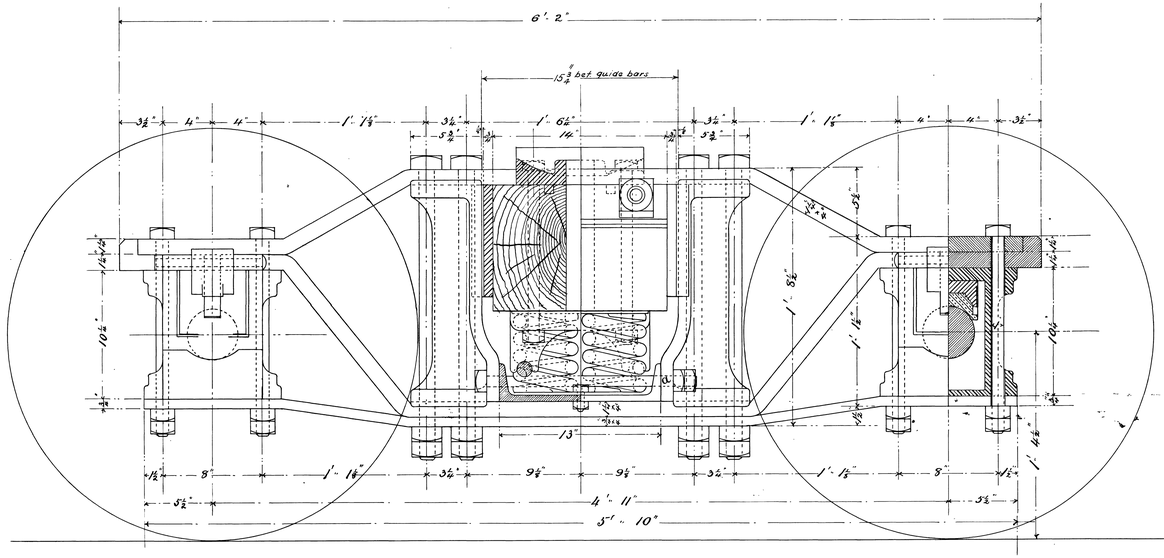

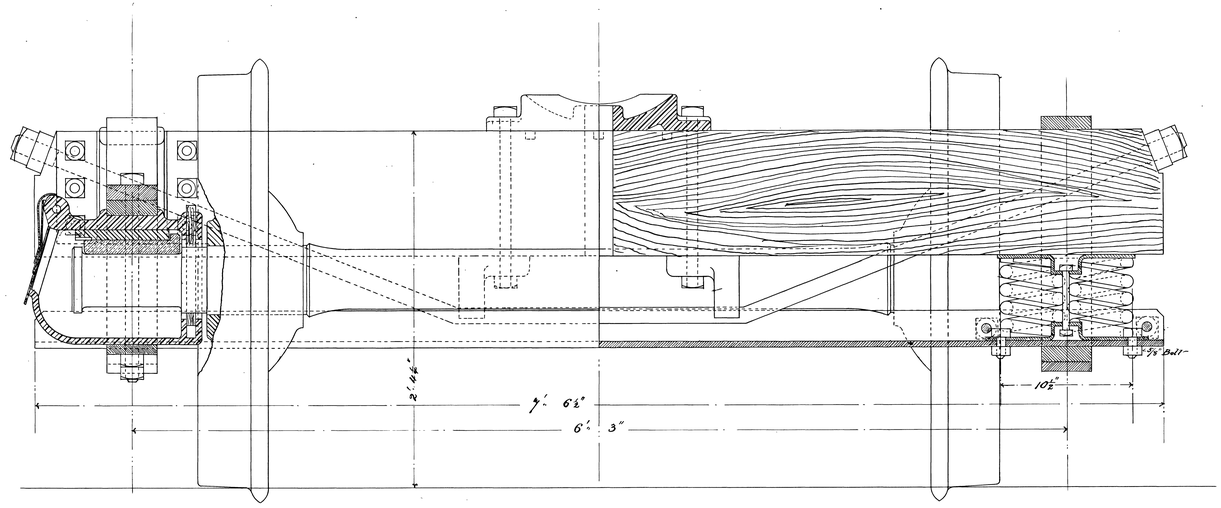

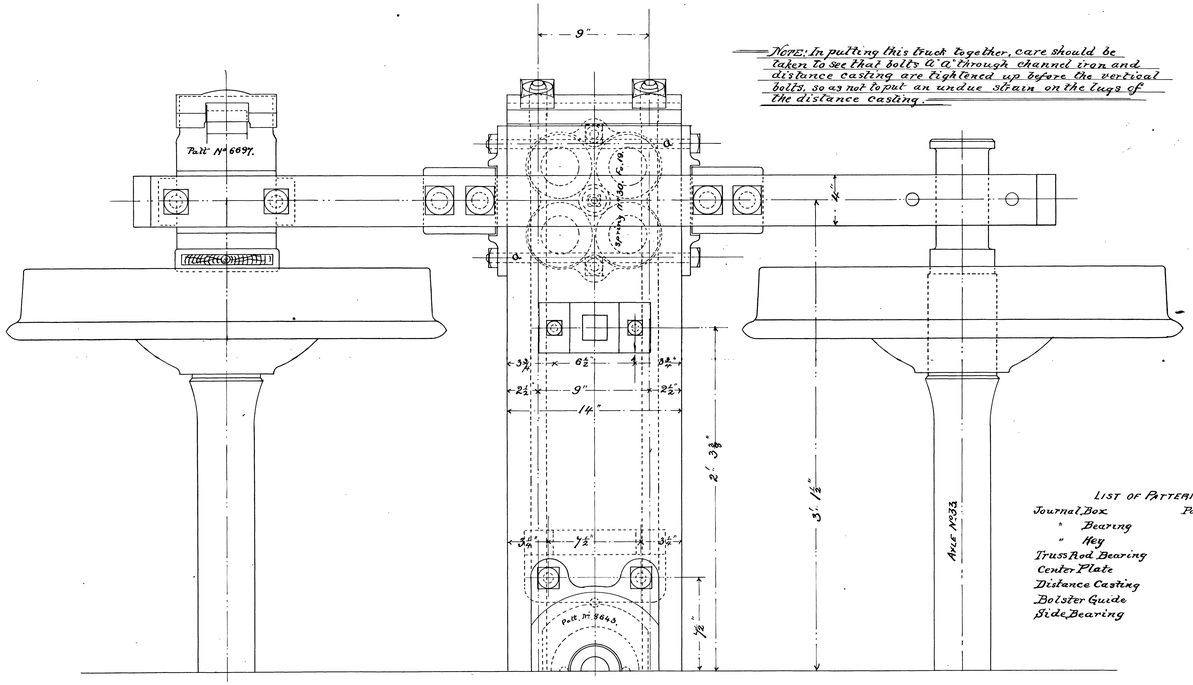

NOTE: In putting this truck together, care should be taken to see that bolts "a" "a" through channel iron and distance casting are tightened up before the vertical bolts, so as not to put an undue strain on the lugs of the distance casting.

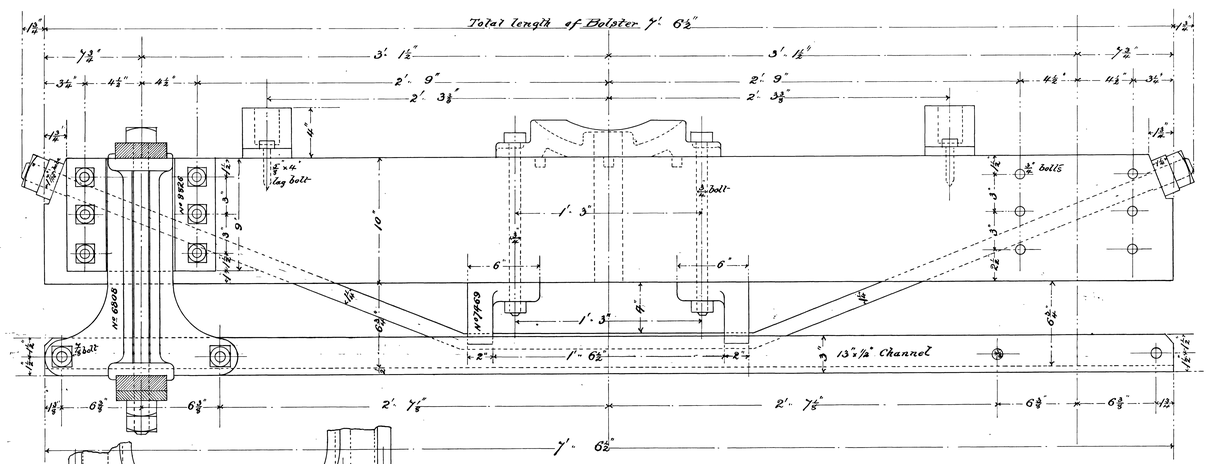

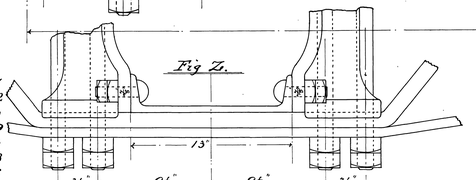

NOTE: Drawing shows Spring No 30, Fig. 19. If Middleton's or any other spring is used which will interfere with long bolts a.a.a. put in short bolts with beveled heads as shown by Fig Z.

LIST OF PATTERNS

Journal Box	Pattern No	6697
" Bearing	"	4482
" Key	"	4483
Truss Rod Bearing	"	7469
Center Plate	"	8643
Distance Casting	"	6808
Bolster Guide	"	8826
Side Bearing	"	7307

O R & N Co

STANDARD B.G. FREIGHT TRUCK No 4

Scale 3" = 1 ft.

Albina, Oregon January 1897.

Office of Master Mechanic

Approved

Master Mechanic.

S. 1241

G 252.