UNION PACIFIC

OFFICE SUPT OF MACHINERY

WASH BOWL No 3.

Scale 6in.= 1ft. OMAHA NEB. December 22nd 87

U.P.H.S. COLLECTION UNION PACIFIC HISTORICAL SOCIETY

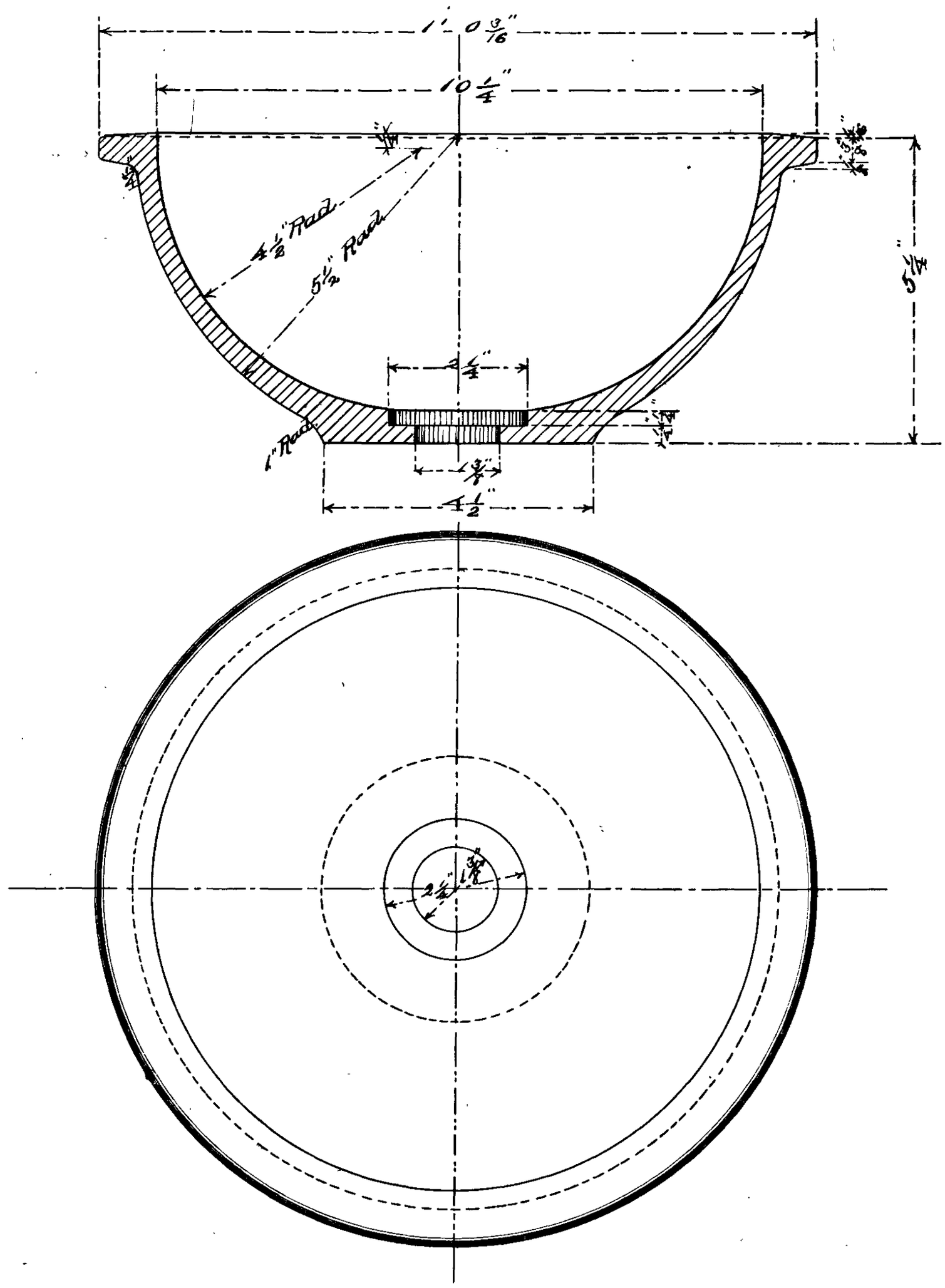

SHEET 3 FOLIO 80.